		Total Time	100:00:00
Date	Explanation	Add. Info/Pictures	Time
8/9/2022	I set up a Husky 48" Workbench and a Miter Saw that I just bought. I also cut some test pieces of wood.	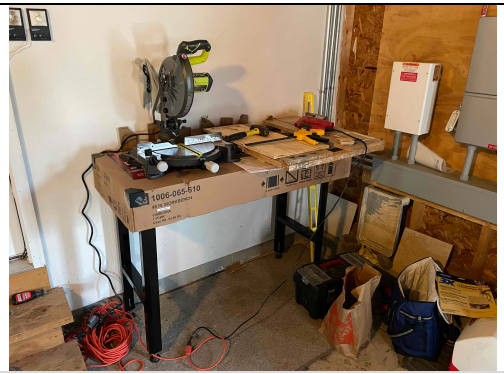	2:00:00
8/9/2022	Messed around practicing miter and bevel cuts. (kinda ruined a lot of wood but learning how to use a miter saw for the first time)		1:00:00
8/10/2022	Messed around again but practiced using the chisel and making a **groove.** Wasn't that great b/c the chisel is dull.	Dado - recess that runs perpendicular to the grain of the wood Groove - recess that runs parallel to the grain of wood	1:30:00
8/11/2022	Found some rustic plywood and finished building a birdhouse. Clamped it all together and should dry for tomorrow. Plywood looks rough so might add a finish.		3:30:00

8/12/2022	Sanded the birdhouse down with 220 grit and added the first coat of an oil-based polyurethane finish.		1:00:00
8/13/2022	My mom wanted some wall decorations so CADed up some plans to make a birdhouse-ish frame to display plants or something like that. Designs were made in Onshape and it took so long bc I am rusty. [Link To Design Document Here]()	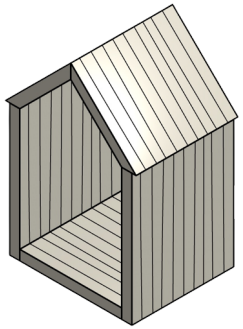	1:30:00
8/14/2022	Started making the birdehous-ish frame thing. Majority of the time was just sanding bc I started off with too high of a grit. Added 2 coats of polyurethane throughout course of day.		3:00:00

8/17/2022	Designed and made a phone/wallet/airpod/watch holder all in one go. Designing took 2hr to adjust for thickness and durability of plywood and building took approximately 3.5hr with a majority of time spent sanding and clamping. [Link to Design Document Here](#)	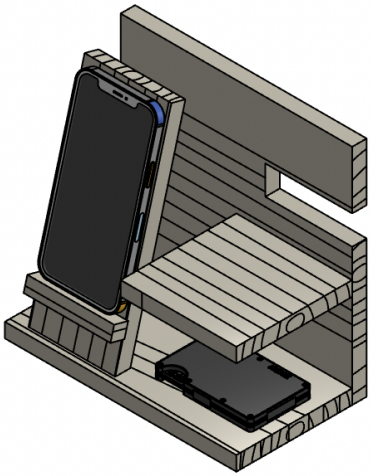	5:30:00
8/18/2022	Spent time sanding down the stand and adding two coats of fast-drying polyurethane finish. Will take a break before starting woodworking again to find a mentor.	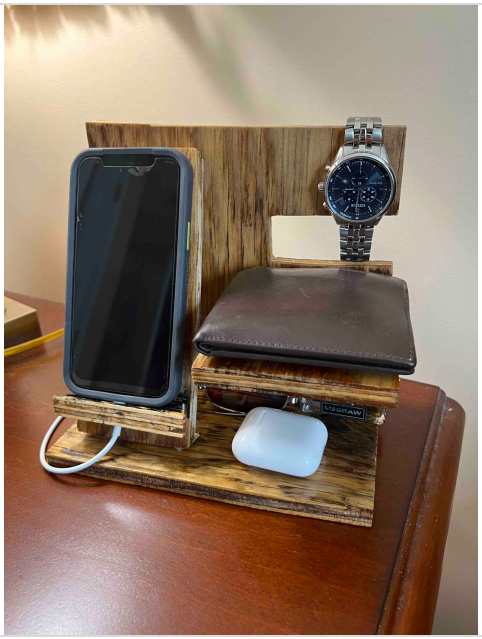	0:30:00

9/18/2022	Bought a wood planar, some more clamps, whetstone, and pocket hole jig. Sharpened my chisels so cut wood better.		1:00:00
9/21/2022	Designed a small bench to be made out of 2x4's. The total amount of wood will equate to around 25 ft which will cost approximately $51 to make.	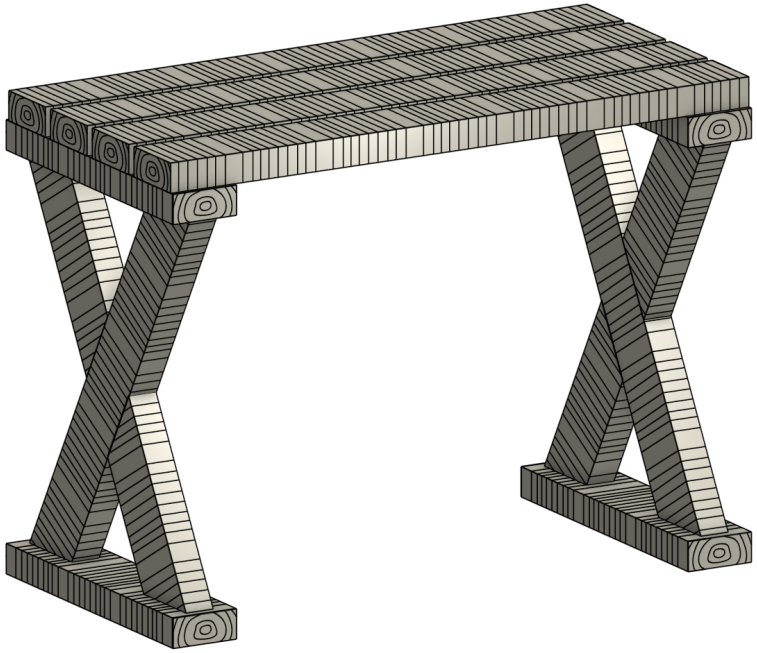	1:30:00
9/22/2022	I went to home depot and bought the 4 2x4's which costed $16 and some 2 1/2" pocket hole screws. After I came home, I cut 24ft of the boards with my miter saw.	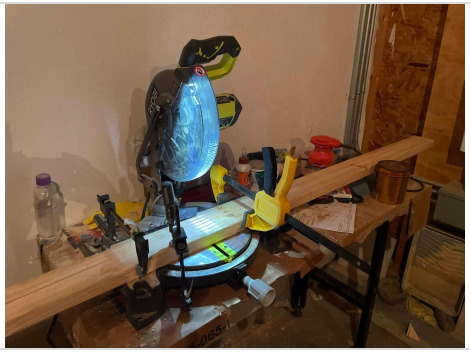	3:30:00

		Took very long to cut because I triple check measurements and had to clamp the board down carefully so the cut pieces wouldn't go flying and injure me.	
9/23/2022	I first added pocket holes to all the mitered boards. I then sanded each board with 60grit and then 220 grit sandpaper (took a majority of the time) to have a smooth finish. After, I used pocket screws to attach the diagonal pieces. To adjust the top pieces, I used some deck screws I had lying around. After I assembled the bench and made sure it was level, I added spackle to the pocket holes to cover them for painting. Although the bench was assembled to the best of my ability, it wobbles because the design doesn't have a center support which I need to add. Other than that, it is a little too tall but it works.		6:00:00

9/25/2022	The bench was wobbly so I cut a 2x4 in half to add as a support. Since the cut was square in two edges and round in the others, I used both a chisel and plane to flatten the wood and make uniformish edges.		
9/27/2022	I put in some more spackle to cover the pocket holes and knots in the pine. I sanded down the spackle after it tried to make it as flush as possible. Went to home depot to buy a primer and added two coats.	Forgot to take picture.	1:00:00

9/28/2022	I added 1 coat of an enamel white paint I had lying around and I added a second coat to areas where I needed to sand it down more. I still need to clean up some more spots but its more or less finished.	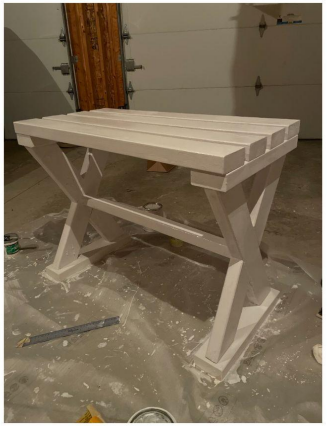	1:00:00
11/13/2023	Got a bunch of scrap wood from advisor after doing renovations at our local church in framingham.		2:00:00

11/14/2022	Created a design for cutting board based on exotic wood I can buy from Amazon. Dimensions of cutting boards are L x W x W -> 16" x 9" x 3/4". Total Cost of each cutting board should be around $34.12. With limited tools I have, it's easiest to just arrange the strips as is in an alternating pattern. Total weight should be 2.341 lbs.	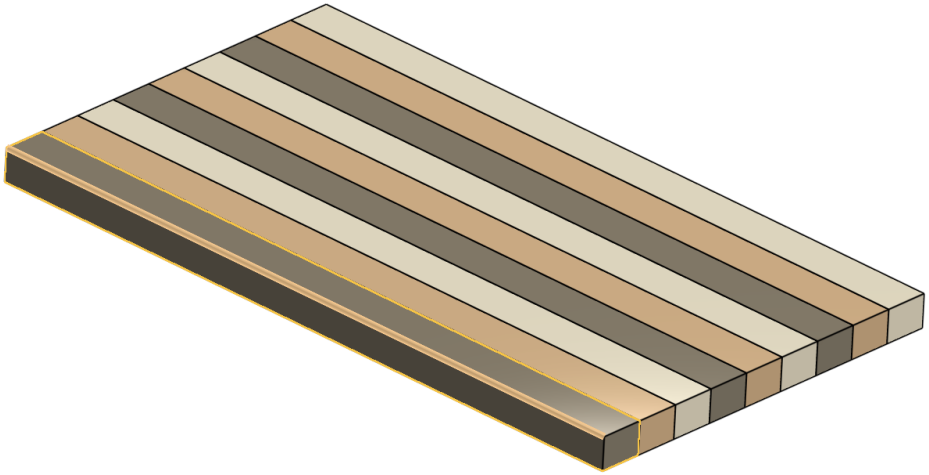	1:00:00

1/25/2022	My mom wanted a small stand for our brita pitcher. Made up a rough sketch in onshape and started working on the base with wood at home. Need to go to home depot to buy some more 2.5" x 0.75" wood and buy wood stain.	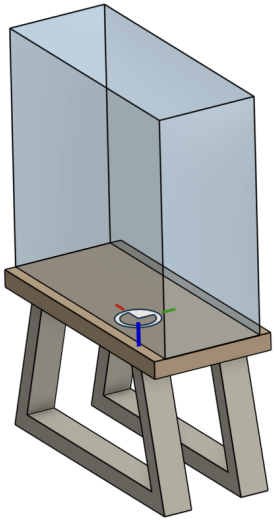	2:45:00
1/26/2022	Went to home depot to buy (1) 1x3 8ft board for $2.22 and a pre-stain conditioner and honey color stain. Will work on assembling base tomorrow.	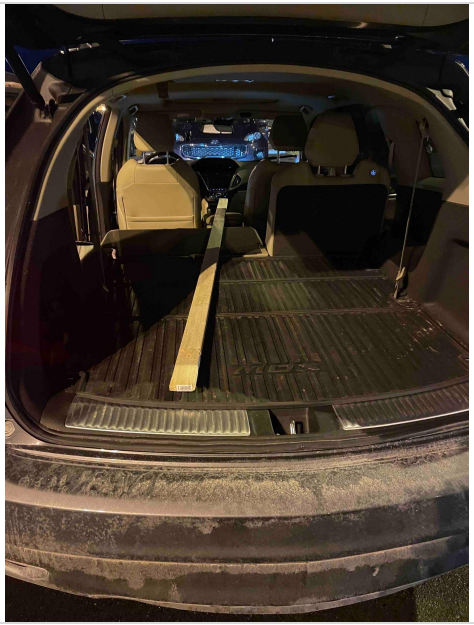	0:45:00

1/27/2022	Cut some more wood to assemble the base. Wood gluing it together and hoping it will all stay together.		1:00:00
2/23/2022	Kind of gave up on the water pitcher stand. The legs kind of fell apart because my designs were whack. Moved onto making a adirondack chair from designs online. Cut maybe 10% of the wood I need so far. Will need to go back to home depot to buy a lot more wood and some more screws. Found a really cool website that helps with reducing waste material from cutting wood and achieve high yield rates.	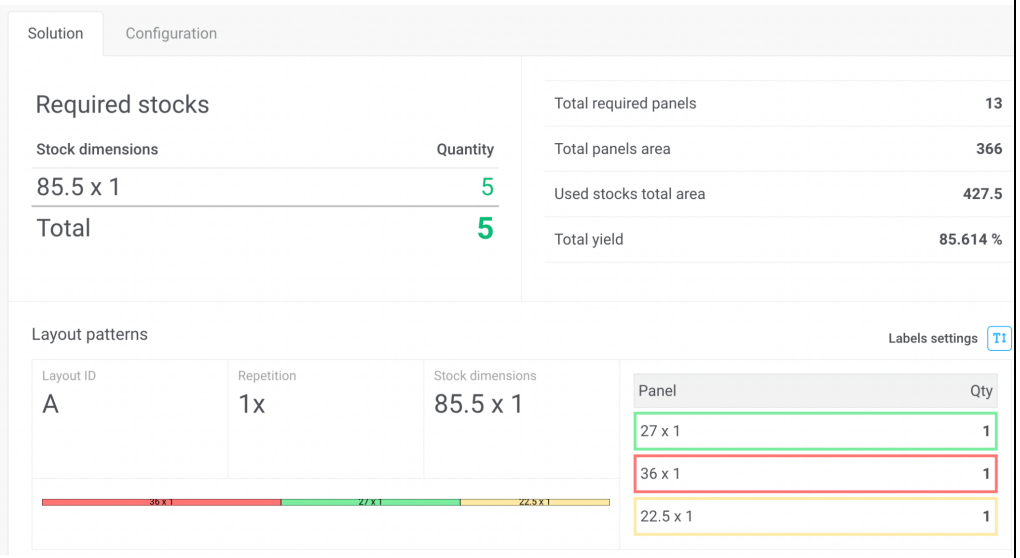	4:30:00
2/24/2022	Went to home depot to buy the remaining amount of wood. Cut maybe 50% of the wood I need. After that need to sand which will be time consuming.		3:30:00

	Just gotta cut one more piece. so 24/26 pieces cut. I would be able to do this faster but my garage is too cold. When the weather is warmer I can move to assembly. After I finished cutting today, I also cleaned my workspace		3:00:00
3/6/2023	Cut the last two pieces and got started on assembly. Got the seat legs assembled.		5:00:00
3/8/2023	Cut out the seat slats and added nails and glue together. I also attached the backboard at an angle to remove the clamps.		5:00:00
3/9/2023	Started assembly on the backboard		3:00:00

3/10/2023	Assembled the backboard and attached it to the legs. Added the arms. Sanded with 80grit then 120grit, then 180grit and finished off with hand sanding 220 grit. Added one coat of pre-stain conditioner		8:00:00
3/11/2023	covered around half the chair in stain, will need to add more coats		2:00:00
3/15/2023	covered more of the chair in stain. I ran out so will need to run to home depot to buy some more.		1:00:00
3/18/2023	Finished Coating the entire chair with stain and letting it dry.		1:00:00
3/21/2023	Added the first coat of polyurethane. I thinned it down with mineral spirits so the coat would be thinner. Noticed that it took off some of the stain.		1:00:00
3/24/2023	Lightly sanded the first coat and added the second coat of polyurethane.		1:00:00
3/26/2023	Buffed off the last coat and brushed away the dust. Took some pics and put the chair in my living room.		0:30:00
3/28/2023	Watched some of paul seller's videos on hand planing. Practiced for a little bit but had some homework to catch up on.		2:00:00
4/1/2023	Practiced using the handplane once more to get a piece of scrap wood flat. Used winding sticks to see how level the board was. Got pretty close but there's still a little wobble to it.		2:00:00
4/3/2023	Watched some videos on basics of using and sharpening a chisel. Got some practice with it on scrap wood but don't think I got the hang of it. Might take classes in the future on handtool woodworking.		2:00:00

4/7/2023	Watched some videos on drilling into wood, the different types of screws, and how to use countersink drill bits. I plan to buy them in the future as this was one detail that was flawed in my chair.		2:00:00
4/10/2023	Watched some videos on wood finishing and how to properly sand and apply paint/stain to already finished wood. I plan to fix up the old bench sitting at MAMS and will see what I can do.		2:00:00

4/11/2023	I asked Rajat to help me pick up the bench Neil Kale built at mams. I plan to fix it up and bring it back next week. Went back to harbor freight to pick up a new sander, some new sandpaper, and some cheap brushes.		1:30:00
4/12/2023	I watched some videos on how to finish wood that's already been stained w/o removing it. Came to the conclusion that if I apply minimal amounts of oil to areas of Neil's bench that were bare, it should blend in well enough.	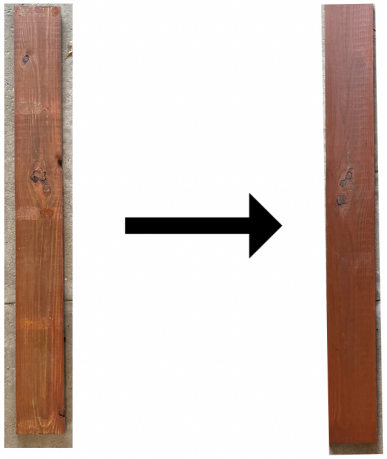	1:30:00

4/13/2023	I began work on planing down the existing wood glue marks with both a chisel and hand plane. I patched areas of bare wood with stain I had on hand.		2:30:00
4/14/2023	Watched some videos on how to properly use countersink drill bits and practiced a bit before using it on the bench. Driving the screws was tough because my drill was too big to fit under the armrest. So to save a trip to Home Depot I jused used a torque wrench and began driving the screws.		2:30:00

4/21/2023	Went to home depot to buy some beeswax finish. Wiped the entire bench off with mineral spirits. Added two coats of the beeswax finish and buffed each time with a cotton cloth for smooth finish.		2:00:00
4/22/2023	Brough the bench back to MAMS		0:30:00